Block Diagram:

A:

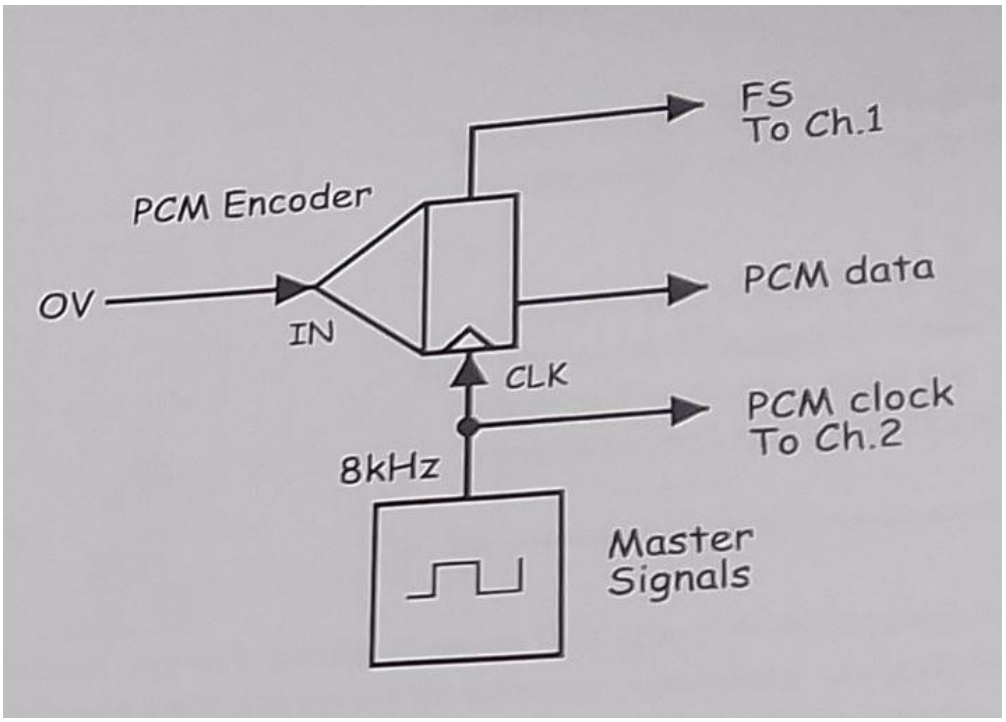

B:

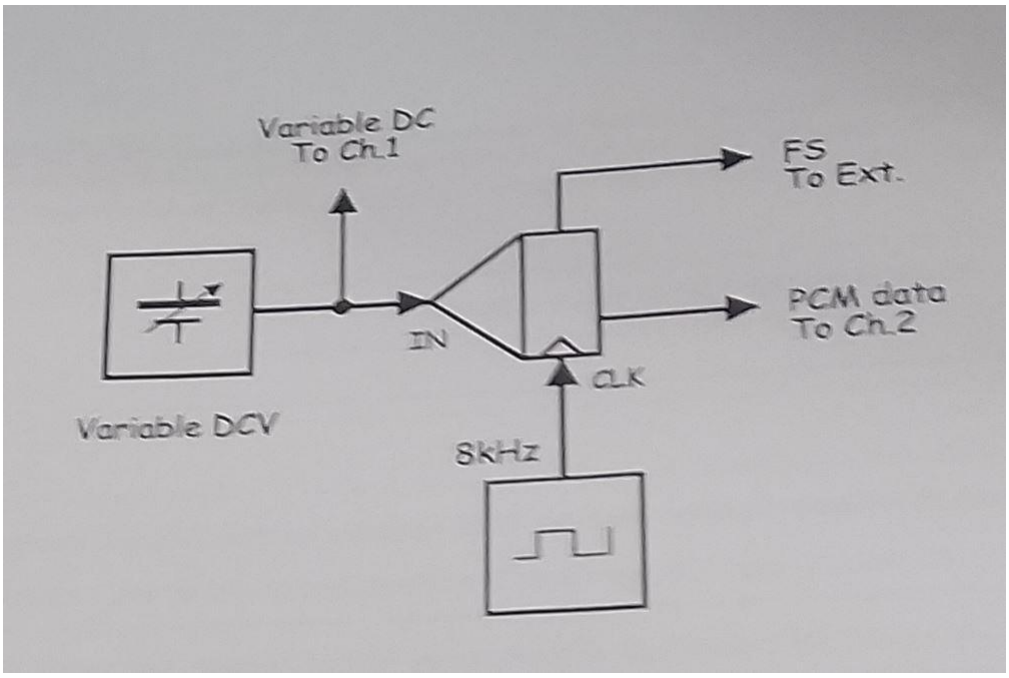

Set Up and Result:

A:

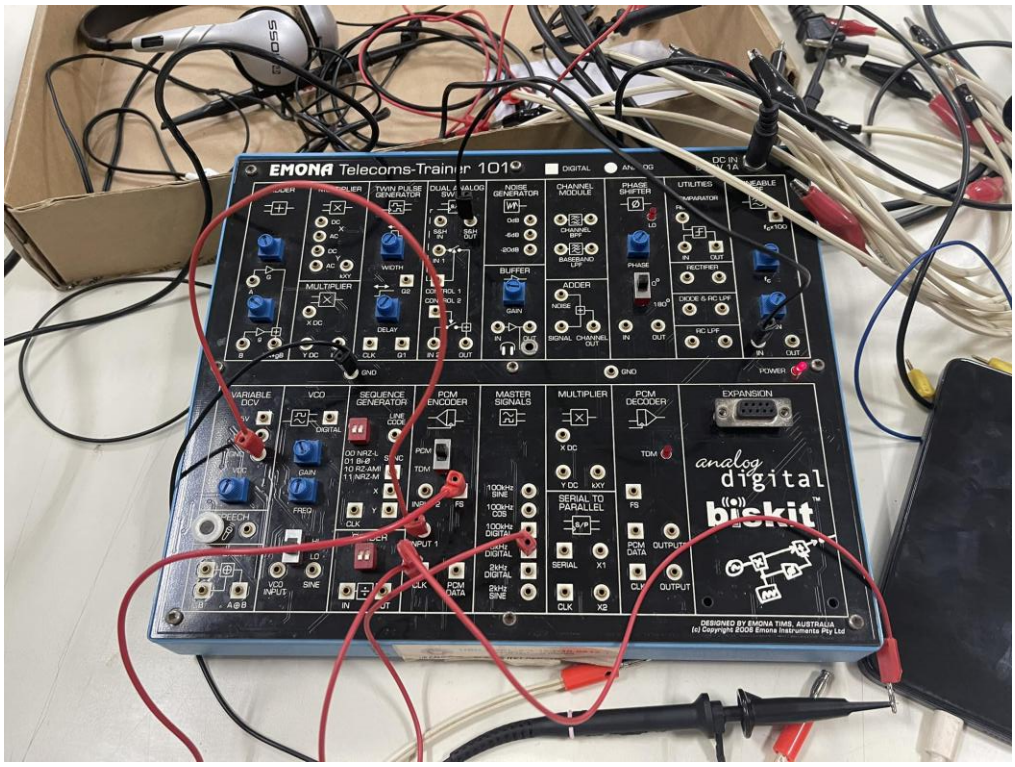

B:

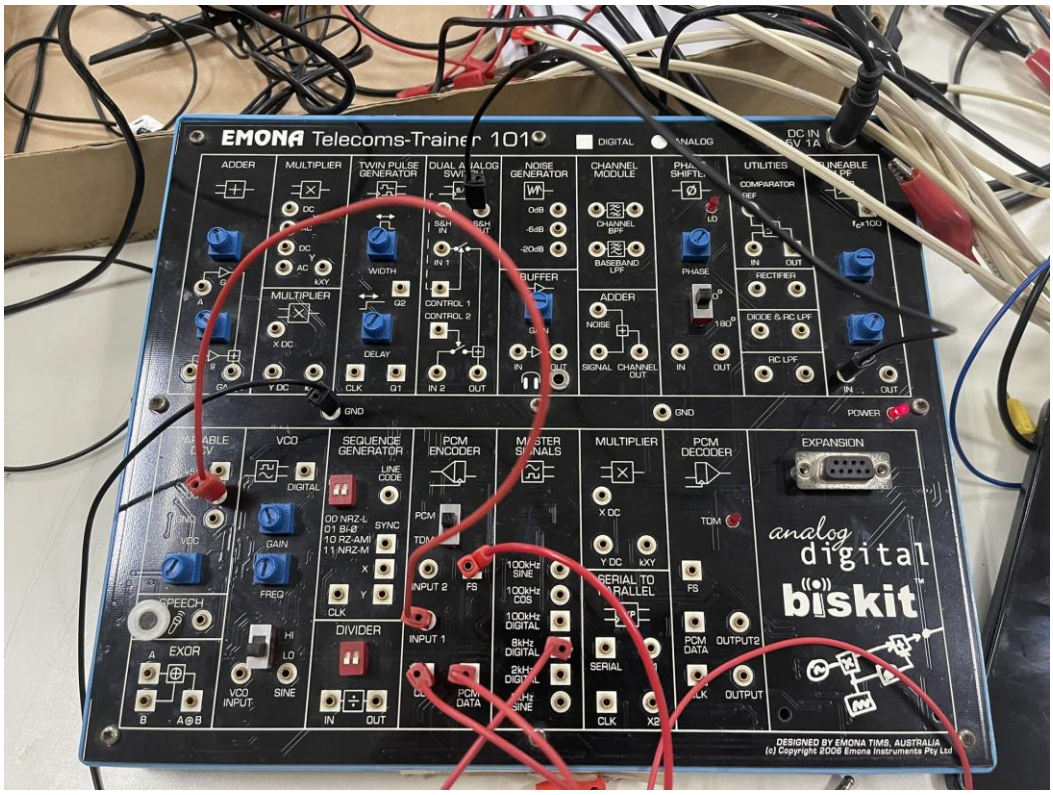
EMONA Telecoms-Trainer 101
DIGITAL
ANALOG
DC IN 5V 1A
ADDER
MULTIPLIER
TWIN PULSE GENERATOR
NOISE GENERATOR
CHANNEL MODULE
UTILITIES
COMPARATOR
RECTIFIER
DIODE & RC LPF
RC LPF
BUFFER
GND
POWER
VCO
SEQUENCE GENERATOR
PCM ENCODER
MASTER SIGNALS
PCM DECODER
EXPANSION
SPEECH
EXOR
DIVIDER
SERIAL TO PARALLEL
analog digital biskit
DESIGNED BY EMONA TIMS, AUSTRALIA
(c) Copyright 2008 Emona Instruments Pty Ltd

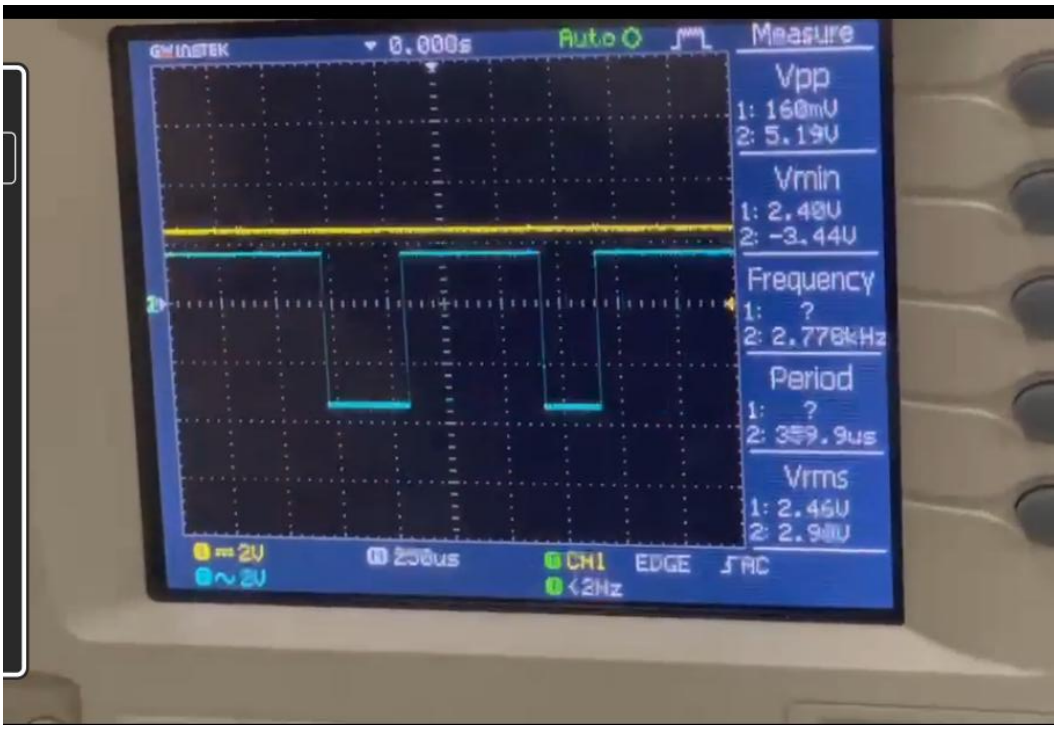
GW INSTEK
0.000s
Auto
Measure
Vpp
1: 160mV
2: 5.19V
Vmin
1: 2.40V
2: -3.44V
Frequency
1: ?
2: 2.778kHz
Period
1: ?
2: 359.9us
Vrms
1: 2.46V
2: 2.90V
2V
2V
250us
CH1 EDGE AC
<2Hz